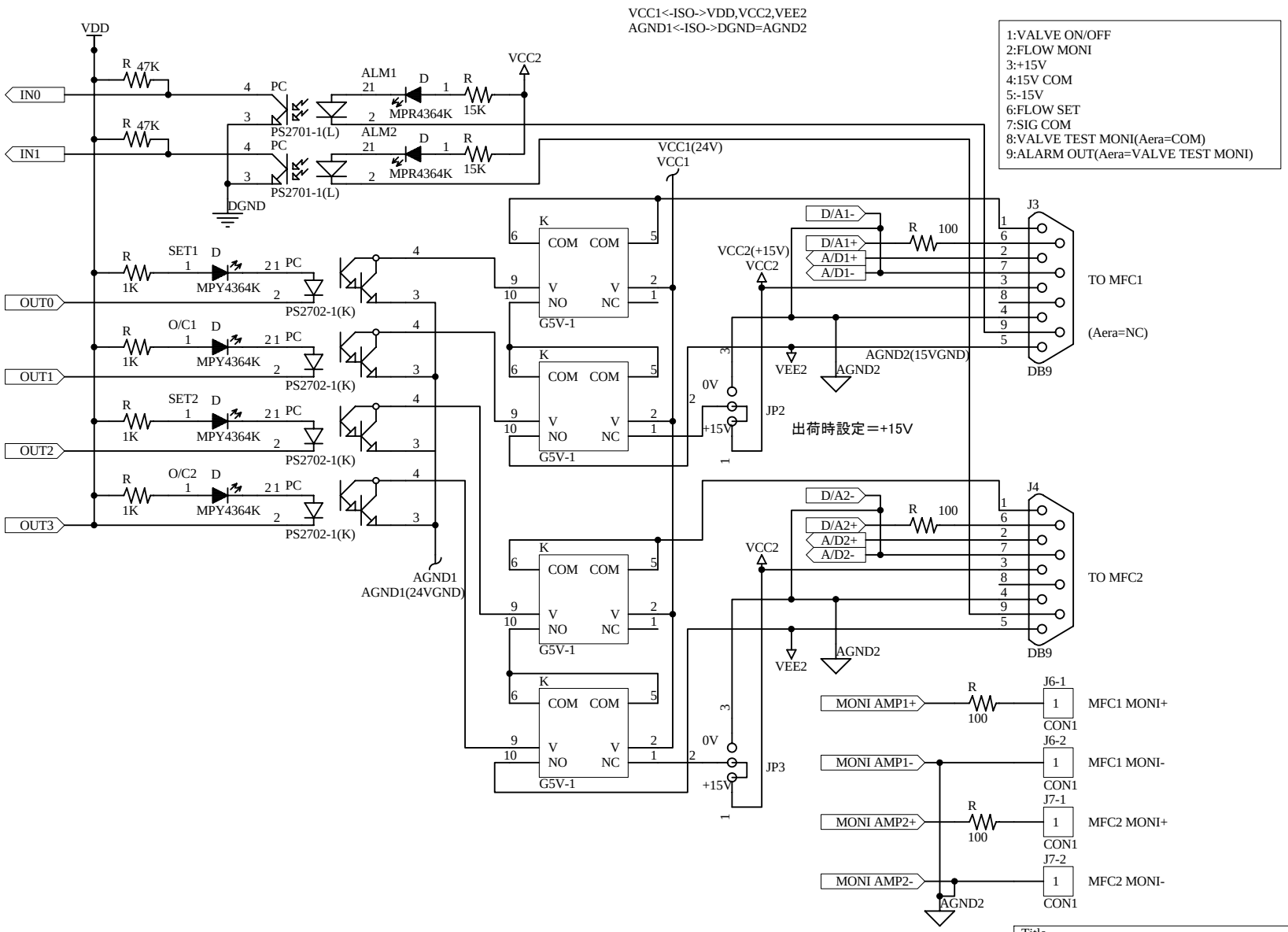

Title		
DNS-MFC IF		
Size A4	Number C651-IF	Revision 01
Date: 1-Jun-2005	Sheet of	
File: N:\Win Protel(SCH,PCB)\H.MIURA\Protel Work\C651(DNS-MFC)\DNS-MFC\DNS-MFC.Do		